cPCI-A3MXM

User's Manual

3U CompactPCI® Serial GPU Carrier Card

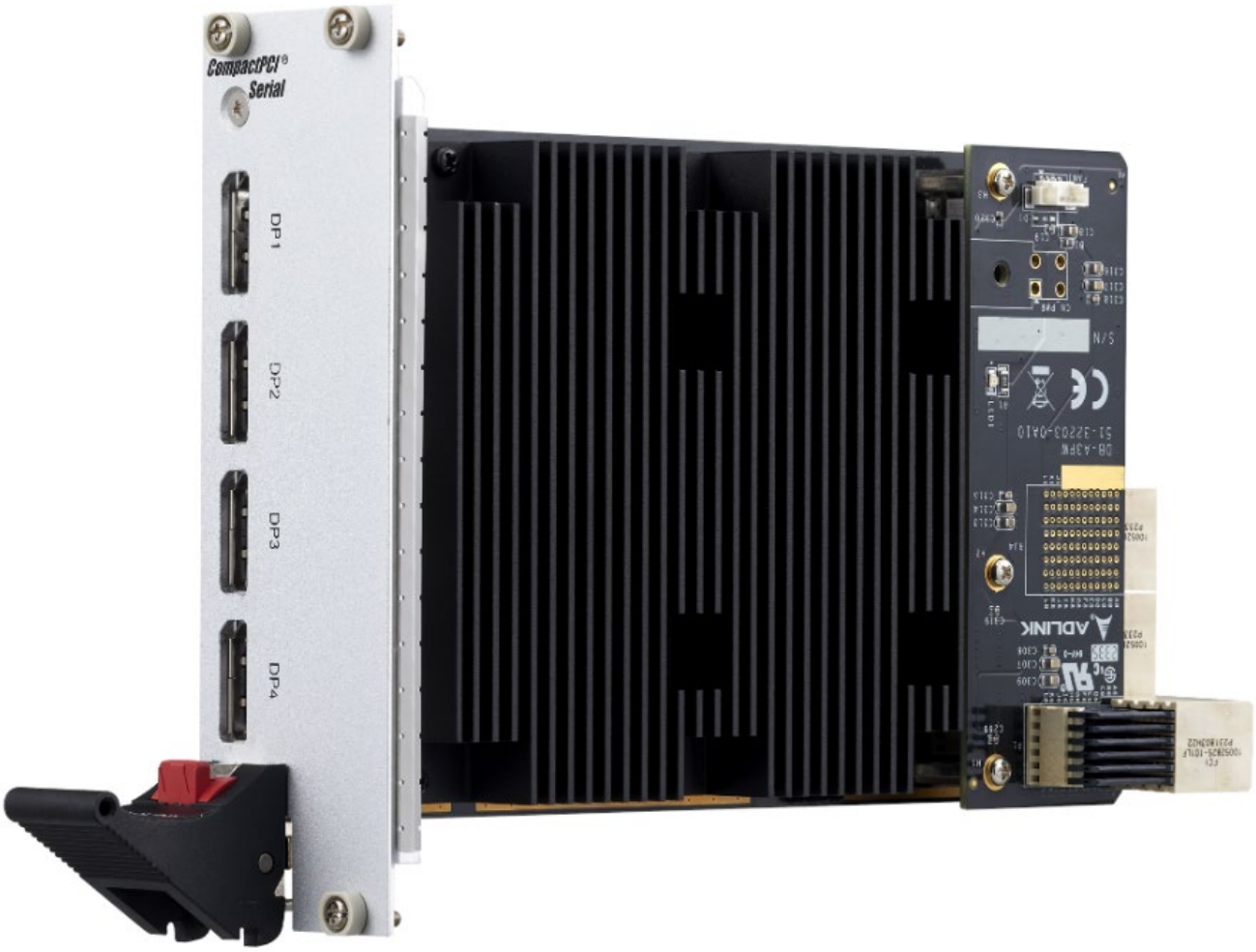

Manual Rev.: 0.2 Preliminary
Revision Date: November 19, 2024
Part Number: 50M-32014-1000

LRI Distribuída no Brasil pela LRI | vendas@lri.com.br | 51 2129-3000
Leading **EDGE COMPUTING**

Revision History

Revision	Description	Date	By
0.1	Preliminary release	2024-10-28	AL
0.2	Specifications, mechanical layout, connector pinouts added	2024-11-19	AL

Distribuída no Brasil pela LRI | vendas@lri.com.br | 51 2129-3000

Preface

Copyright

Copyright 2024 ADLINK Technology, Inc. This document contains proprietary information protected by copyright. All rights are reserved. No part of this manual may be reproduced by any mechanical, electronic, or other means in any form without prior written permission of the manufacturer.

Disclaimer

The information in this document is subject to change without prior notice in order to improve reliability, design, and function and does not represent a commitment on the part of the manufacturer. In no event will the manufacturer be liable for direct, indirect, special, incidental, or consequential damages arising out of the use or inability to use the product or documentation, even if advised of the possibility of such damages.

Environmental Responsibility

ADLINK is committed to fulfill its social responsibility to global environmental preservation through compliance with the European Union's Restriction of Hazardous Substances (RoHS) directive and Waste Electrical and Electronic Equipment (WEEE) directive. Environmental protection is a top priority for ADLINK. We have enforced measures to ensure that our products, manufacturing processes, components, and raw materials have as little impact on the environment as possible. When products are at their end of life, our customers are encouraged to dispose of them in accordance with the product disposal and/or recovery programs prescribed by their nation or company.

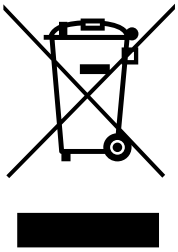

Battery Labels (for products with battery)

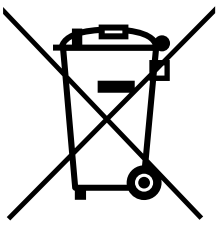







California Proposition 65 Warning



WARNING: This product can expose you to chemicals including acrylamide, arsenic, benzene, cadmium, Tris(1,3-dichloro-2-propyl)phosphate (TDCPP), 1,4-Dioxane, formaldehyde, lead, DEHP, styrene, DINP, BBP, PVC, and vinyl materials, which are known to the State of California to cause cancer, and acrylamide, benzene, cadmium, lead, mercury, phthalates, toluene, DEHP, DIDP, DnHP, DBP, BBP, PVC, and vinyl materials, which are known to the State of California to cause birth defects or other reproductive harm. For more information go to www.P65Warnings.ca.gov.

Trademarks

Product names mentioned herein are used for identification purposes only and may be trademarks and/or registered trademarks of their respective companies.

Distribuída no Brasil pela LRI | vendas@lri.com.br | 51 2129-3000

Conventions

Take note of the following conventions used throughout this manual to make sure that users perform certain tasks and instructions properly.

The cPCI-A3MXM Module (MXM-A1000 or MXM-A4500)



NOTE:

Additional information, aids, and tips that help users perform tasks.



CAUTION:

Information to prevent ***minor*** physical injury, component damage, data loss, and/or program corruption when trying to complete a task.



WARNING:

Information to prevent ***serious*** physical injury, component damage, data loss, and/or program corruption when trying to complete a specific task.

Distribuída no Brasil pela LRI | vendas@lri.com.br | 51 2129-3000

Table of Contents

Preface ..... **iii**

List of Figures ..... **vi**

List of Tables ..... **vi**

1 Introduction **1**

1.1 Features 1

1.2 Package Contents 1

2 Specifications **3**

2.1 Product Specifications 3

2.2 Block Diagram 4

3 Mechanical Layout **5**

3.1 cPCI-A3MXM Connector and Switch Locations 5

3.2 DB-A3PW Connector Locations and Functions 6

4 Connector Pinouts **9**

4.1 cPCI-A3MXM CompactPCI P1 Connector 9

4.2 cPCI-A3MXM CompactPCI P2 Connector 9

4.3 cPCI-A3MXM CompactPCI P3 Connector 10

4.4 DB-A3PW P1 Connector -SKU1 10

4.5 DB-A3PW RJ4 Connector -SKU2 11

4.6 DisplayPort Connector (CN2-CN5) 12

4.7 cPCI-A3MXM Board to Board Connector (CN6) 13

4.8 MXM Connector 14

4.9 DB-A3PW Board to Board Connector (CN6) – SKU1 17

4.10 DB-A3PW FAN Connector (FAN1) – SKU1 18

4.11 DB-A3PW ATX 4 Pin Power Connector (CN_PWR) – SKU2 18

4.12 DIP Switch Connector 19

5 Driver Installation **21**

5.1 Windows Driver 21

Safety Instructions **22**

Getting Services **23**

Distribuída no Brasil pela LRI | vendas@lri.com.br | 51 2129-3000

List of Figures

Figure 1: Functional block diagram....4
Figure 2: cPCI-A3MXM IO connector and switch locations (Top)....5
Figure 3:cPCI-A3MXM connector and switch locations (Bottom) 6
Figure 4:DB-A3PW power board connector locations (Top)....6
Figure 5:DB-A3PW power board connector locations (Bottom)....7
Figure 6:DB-A3PW daughter board – SKU1: Power input from P1)....7
Figure 7:DB-A3PW rear board – SKU 2: Power input from ATX 4 pin connector....8
Figure 8:Switch locations (Bottom)....19

List of Tables

Table 1: cPCI-A3MXM CompactPCI P1 connector....9
Table 2: cPCI-A3MXM CompactPCI P2 connector....9
Table 3: cPCI-A3MXM CompactPCI P3 connector....10
Table 4: DB-A3PW P1 connector -SKU1....10
Table 5: DB-A3PW RJ4 connector -SKU2....11
Table 6: DisplayPort connector....12
Table 7: cPCI-A3MXM board to board connector....13
Table 8: MXM connector....14
Table 9: DB-A3PW Board to Board Connector....17
Table 10: DB-A3PW FAN connector....18
Table 11: DB-A3PW ATX 4 pin power connector....18
Table 12: Switch connector 1 and 2....19

Distribuída no Brasil pela LRI | vendas@lri.com.br | 51 2129-3000

1 Introduction

The 3U 4HP/8HP CPCI-S.0 Compact PCI Serial peripheral cPCI-A3MXM is an MXM carrier card that supports both type A and type B MXM GPU card, via PCIe Gen4 x 8. All display signal will support both front and rear transitions. The cPCI-A3MXM is a CompactPCI Serial card designed to be compatible with standard CPCI-S.0 systems.

The front panel of the cPCI-A3MXM features 4 x DP connectors, and a locking mechanism is required.
The rear transition of the cPCI-A3MXM supports all rear signals to P3.

1.1 Features

- Follow PICMG® CompactPCI® Serial design guide
- CompactPCI® Serial, 3U 4HP/8HP (100mm x 160mm)
- Compatible with MXM Type A (82 mm x 70 mm) or Type B (82 mm x 105 mm)
- Supports NVIDIA A1000 with 2048 CUDA® cores, 16 RT cores and 64 Tensor cores or NVIDIA RTX™ A4500 with 5888 CUDA® cores, 46 RT cores, and 184 Tensor cores.
- 4x DisplayPort 1.4, supporting 4K (3840x2160) resolution
- Operating temperature: -40°C to +70°C
- Designed to meet EN50155 standards

1.2 Package Contents

The cPCI-A3MXM is packaged with the following components. If any of the following items are missing or damaged, retain the shipping carton and packing material and contact the dealer for inspection. Please obtain authorization before returning any product to ADLINK. The packing contents of cPCI-A3MXM non-standard configurations will vary depending on customer requests.

CompactPCI Module

The cPCI-A3MXM Module (MXM-A1000 or MXM-A4500)



The contents of non-standard cPCI-A3MXM configurations may vary depending on the customer's requirements.



This product must be protected from static discharge and physical shock. Never remove any of the components except at a static-free workstation. Use the anti-static bag shipped with the product when putting the board on a surface. Wear an anti-static wrist strap properly grounded on one of the system's ESD ground jacks when installing or servicing system components.

Distribuída no Brasil pela LRI | vendas@lri.com.br | 51 2129-3000

This page intentionally left blank.

Distribuída no Brasil pela LRI | vendas@lri.com.br | 51 2129-3000

2 Specifications

2.1 Product Specifications

PCIe Bus Architecture	• Follow PICMG® CompactPCI® Serial design guide • 1x PCIe Gen 4.0 x 8 from P1 & P2 (with Gen 3.0 connector now)
Form Factor	• 4x Display Port 1.4, support 4K (3840x2160) resolution • With MXM-A1000 4HP CPCI-S.0 R2.0 standard with locking handle and two front panel securing screws • With MXM A4500 8HP CPCI-S.0 R2.0 standard with locking handle and two front panel securing screws with BTB power board
MXM	• Type A (MXM-A1000) & Type B (MXM-A4500) • Support Max 120W • Support PCIe Gen 4.0 x 8
Power Board	• As DB-A3PW for more power with 8HP for MXM-A4500 configuration for heat sink version, 12V input from P1
OS Support	• Windows 10 • Ubuntu 22.X

Environmental	• Operating temperature: (With Heat sink version)
	  • 4HP: -40°C to70°C with airflow, supports display out only.
	  • 8HP: -40°C to 70°C, EN50155 OT3 Class +ST1 (+85C for 10mins) when provided with airflow (GPU card will be screen out by ETT. Without heater support)
	• Storage temperature: -40°C to 95°C
	• Humidity: 5% to 95% relative humidity (non-condensing)

Dimensions	• With MXM-A1000 (air cooling type) 4HP: 100 mm x 160 mm x 20.32 mm (L x W x H) • With MXM-A4500 (air cooling type) 8HP: 100 mm x 160 mm x 40.64 mm (L x W x H)
MTBF	• 15.1 years at minimum
Weight	• 4HP: 0.6 kg, 8HP: 0.7 kg (including heatsink)

Distribuída no Brasil pela LRI | vendas@lri.com.br | 51 2129-3000

2.2 Block Diagram

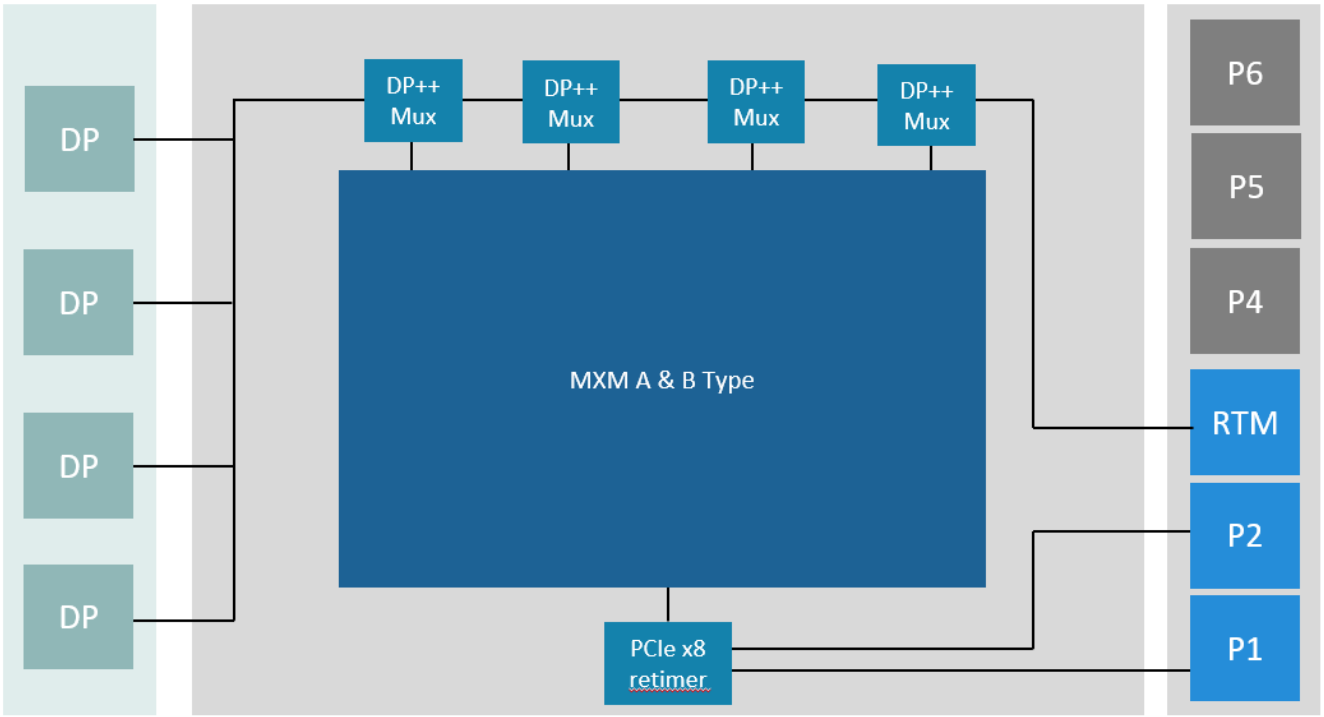

Figure 1: Functional block diagram

Distribuída no Brasil pela LRI | vendas@lri.com.br | 51 2129-3000

3 Mechanical Layout

3.1 cPCI-A3MXM Connector and Switch Locations

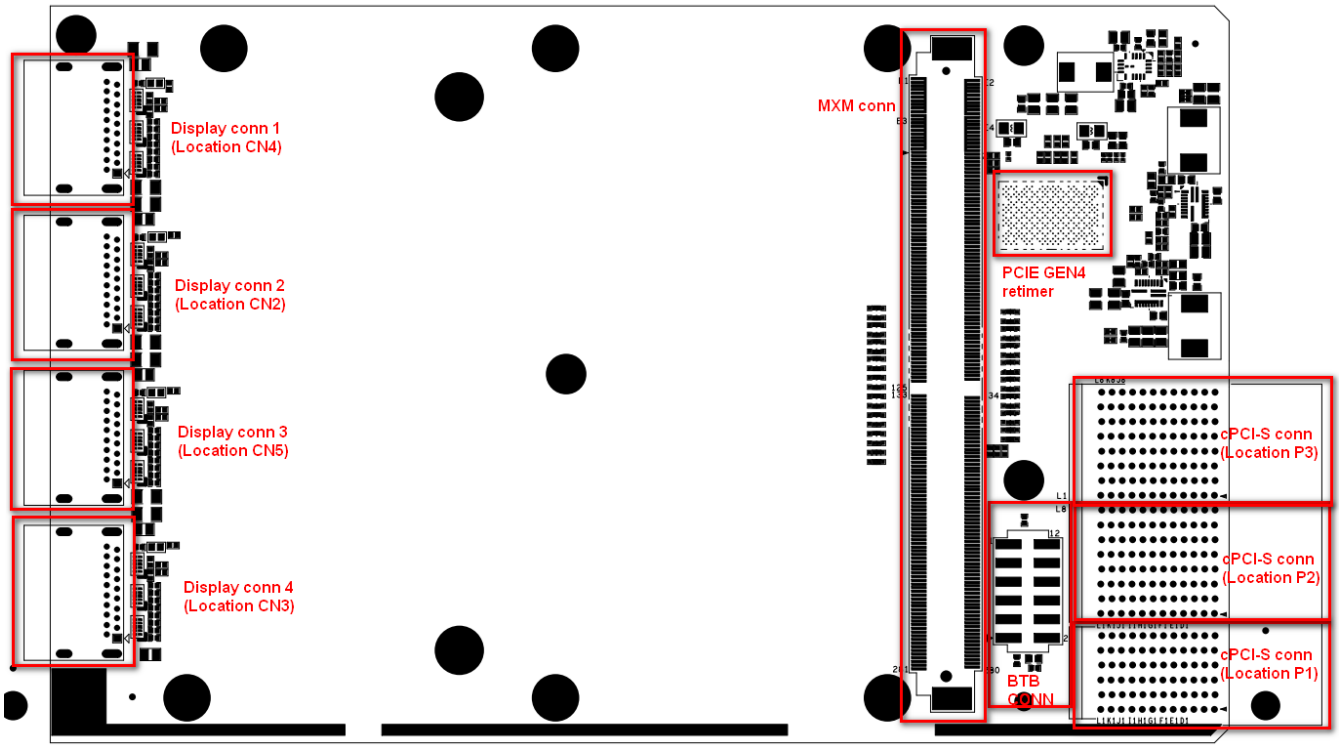

P1 to P3	CompactPCI Serial connectors
BTB connector	Power board connector (DB-A3PW)
Retimer	PCIe retimer
MXM connector	PCIe MXM card connector (MXM-A1000 or MXM-A4500)
DP connector	Front panel DisplayPort connectors

Figure 2: cPCI-A3MXM IO connector and switch locations (Top)

Distribuída no Brasil pela LRI | vendas@lri.com.br | 51 2129-3000

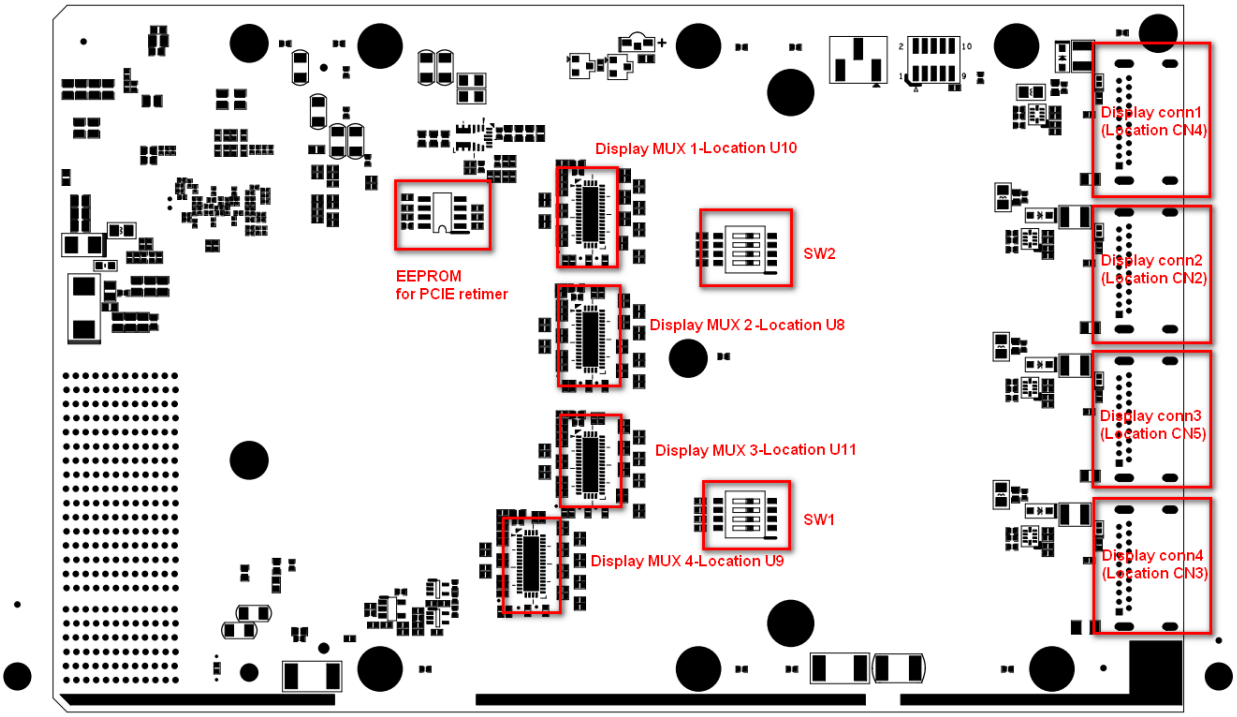

SW1 to SW2	Display port output switch

Figure 3:cPCI-A3MXM connector and switch locations (Bottom)

3.2 DB-A3PW Connector Locations and Functions

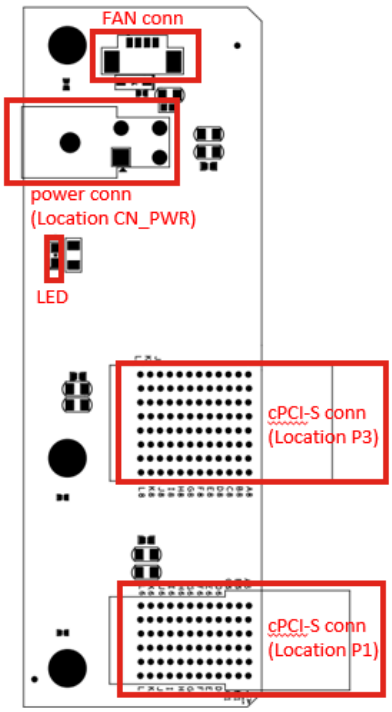

P1 to P3	CompactPCI Serial connectors
LED	12V Power OK
Power connector	12V ATX 4 pin power connector
Fan connector	Fan connector

Figure 4:DB-A3PW power board connector locations (Top)

Distribuída no Brasil pela LRI | vendas@lri.com.br | 51 2129-3000

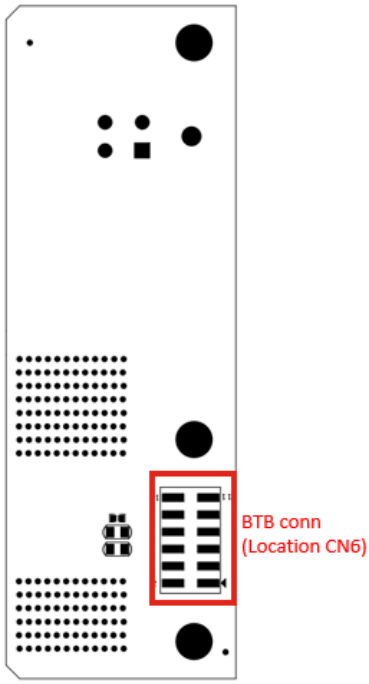

P1 to P3	CompactPCI Serial connectors

Figure 5:DB-A3PW power board connector locations (Bottom)



Figure 6:DB-A3PW daughter board – SKU1: Power input from P1)

Distribuída no Brasil pela LRI | vendas@lri.com.br | 51 2129-3000

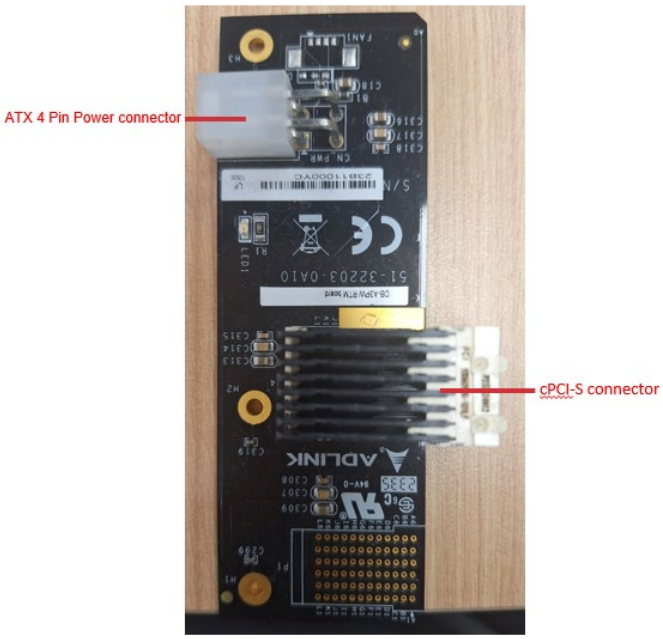

Figure 7:DB-A3PW rear board – SKU 2: Power input from ATX 4 pin connector

Distribuída no Brasil pela LRI | vendas@lri.com.br | 51 2129-3000

4 Connector Pinouts

4.1 cPCI-A3MXM CompactPCI P1 Connector

Table 1: cPCI-A3MXM CompactPCI P1 connector

Name	A	B	C	D	E	F
1	P_+12V	NC_P_+5VSB	GND	P_+12V	P_+12V	GND
2	GND	P1_I2C_SCL	P1_I2C_SDA	GND	NC	NC
3	NC	NC	NC	NC	NC	NC
4	GND	NC	NC	GND	P1_PCIE_CLK_DP	P1_PCIE_CLK_DN
5	PCIE_TX0_DP	PCIE_TX0_DN	GND	PCIE_RX0_DP	PCIE_RX0_DN	GND
6	GND	PCIE_TX2_DP	PCIE_TX2_DN	GND	PCIE_RX2_DP	PCIE_RX2_DN

Name	G	H	I	J	K	L
1	P_+12V	P_+12V	GND	P_+12V	P_+12V	GND
2	GND	P1_PRST_N	NC_P1_WAKE_OUT_N	GND	P1_PCIE_EN_N	NC_P1_SYSEN_N
3	NC	NC	NC	NC	NC	NC
4	GND	NC	NC	GND	NC	NC
5	PCIE_TX1_DP	PCIE_TX1_DN	GND	PCIE_RX1_DP	PCIE_RX1_DN	GND
6	GND	PCIE_TX3_DP	PCIE_TX3_DN	GND	PCIE_RX3_DP	PCIE_RX3_DN

4.2 cPCI-A3MXM CompactPCI P2 Connector

Table 2: cPCI-A3MXM CompactPCI P2 connector

Pin	A	B	C	D	E	F
1	PCIE_TX4_DP	PCIE_TX4_DN	GND	PCIE_RX4_DP	PCIE_RX4_DN	GND
2	GND	PCIE_TX6_DP	PCIE_TX6_DN	GND	PCIE_RX6_DP	PCIE_RX6_DN
3	NC	NC	GND	NC	NC	GND
4	GND	NC	NC	GND	NC	NC
5	NC	NC	GND	NC	NC	GND
6	GND	NC	NC	GND	NC	NC
7	NC	NC	GND	NC	NC	GND
8	GND	NC	NC	GND	NC	NC

Pin	G	H	I	J	K	L
1	PCIE_TX5_DP	PCIE_TX5_DN	GND	PCIE_RX5_DP	PCIE_RX5_DN	GND
2	GND	PCIE_TX7_DP	PCIE_TX7_DN	GND	PCIE_RX7_DP	PCIE_RX7_DN
3	NC	NC	GND	NC	NC	GND
4	GND	NC	NC	GND	NC	NC
5	NC	NC	GND	NC	NC	GND
6	GND	NC	NC	GND	NC	NC
7	NC	NC	GND	NC	NC	GND
8	GND	NC	NC	GND	NC	NC

Distribuída no Brasil pela LRI | vendas@lri.com.br | 51 2129-3000

4.3 cPCI-A3MXM CompactPCI P3 Connector

Table 3: cPCI-A3MXM CompactPCI P3 connector

Pin	A	B	C	D	E	F
1	REAR_DP_B_L0_DP	REAR_DP_B_L0_DN	GND	REAR_DP_B_L1_DP	REAR_DP_B_L1_DN	GND
2	GND	REAR_DP_B_HPD	NC	GND	REAR_DP_B_AUX_R_DP	REAR_DP_B_AUX_R_DN
3	REAR_DP_B_L2_DP	REAR_DP_B_L2_DN	GND	REAR_DP_B_L3_DP	REAR_DP_B_L3_DN	GND
4	GND	REAR_DP_D_HPD	NC	GND	REAR_DP_D_AUX_R_DP	REAR_DP_D_AUX_R_DN
5	REAR_DP_A_L0_DP	REAR_DP_A_L0_DN	GND	REAR_DP_A_L1_DP	REAR_DP_A_L1_DN	GND
6	GND	REAR_DP_A_HPD	NC	GND	REAR_DP_A_AUX_R_DP	REAR_DP_A_AUX_R_DN
7	REAR_DP_A_L2_DP	REAR_DP_A_L2_DN	GND	REAR_DP_A_L3_DP	REAR_DP_A_L3_DN	GND
8	GND	REAR_DP_C_HPD	NC	GND	REAR_DP_C_AUX_R_DP	REAR_DP_C_AUX_R_DN

Pin	G	H	I	J	K	L
1	REAR_DP_D_L0_DP	REAR_DP_D_L0_DN	GND	REAR_DP_D_L1_DP	REAR_DP_D_L1_DN	GND
2	GND	NC	NC	GND	NC	NC
3	REAR_DP_D_L2_DP	REAR_DP_D_L2_DN	GND	REAR_DP_D_L3_DP	REAR_DP_D_L3_DN	GND
4	GND	NC	NC	GND	NC	NC
5	REAR_DP_C_L0_DP	REAR_DP_C_L0_DN	GND	REAR_DP_C_L1_DP	REAR_DP_C_L1_DN	GND
6	GND	NC	NC	GND	NC	NC
7	REAR_DP_C_L2_DP	REAR_DP_C_L2_DN	GND	REAR_DP_C_L3_DP	REAR_DP_C_L3_DN	GND
8	GND	P_+3V3	P_+3V3	GND	P_+3V3	P_+3V3

4.4 DB-A3PW P1 Connector -SKU1

Table 4: DB-A3PW P1 connector -SKU1

Pin	A	B	C	D	E	F
1	P_+12V	NC	GND	P_+12V	P_+12V	GND
2	GND	NC	NC	GND	NC	NC
3	NC	NC	NC	NC	NC	NC
4	GND	NC	NC	GND	NC	NC
5	NC	NC	GND	NC	NC	GND
6	GND	NC	NC	GND	NC	NC

Distribuída no Brasil pela LRI | vendas@lri.com.br | 51 2129-3000

Pin	G	H	I	J	K	L
1	P_+12V	P_+12V	GND	P_+12V	P_+12V	GND
2	GND	NC	NC	GND	NC	NC
3	NC	NC	NC	NC	NC	NC
4	GND	NC	NC	GND	NC	NC
5	NC	NC	GND	NC	NC	GND
6	GND	NC	NC	GND	NC	NC

4.5 DB-A3PW RJ4 Connector -SKU2

Table 5: DB-A3PW RJ4 connector -SKU2

Pin	A	B	C	D	E	F
1	NC	NC	GND	NC	NC	GND
2	GND	GND	NC	GND	NC	NC
3	NC	NC	GND	NC	NC	GND
4	GND	P_+12V	P_+12V	GND	P_+12V	P_+12V
5	P_+12V	P_+12V	GND	P_+12V	P_+12V	GND
6	GND	NC	NC	GND	NC	NC
7	NC	NC	GND	NC	NC	GND
8	GND	NC	NC	GND	NC	NC

Pin	G	H	I	J	K	L
1	NC	NC	GND	NC	NC	GND
2	GND	NC	NC	GND	NC	NC
3	NC	NC	GND	NC	NC	GND
4	GND	P_+12V	P_+12V	GND	P_+12V	P_+12V
5	P_+12V	P_+12V	GND	P_+12V	P_+12V	GND
6	GND	NC	NC	GND	NC	NC
7	NC	NC	GND	NC	NC	GND
8	GND	NC	NC	GND	NC	NC

Distribuída no Brasil pela LRI | vendas@lri.com.br | 51 2129-3000

4.6 DisplayPort Connector (CN2-CN5)

Table 6: DisplayPort connector

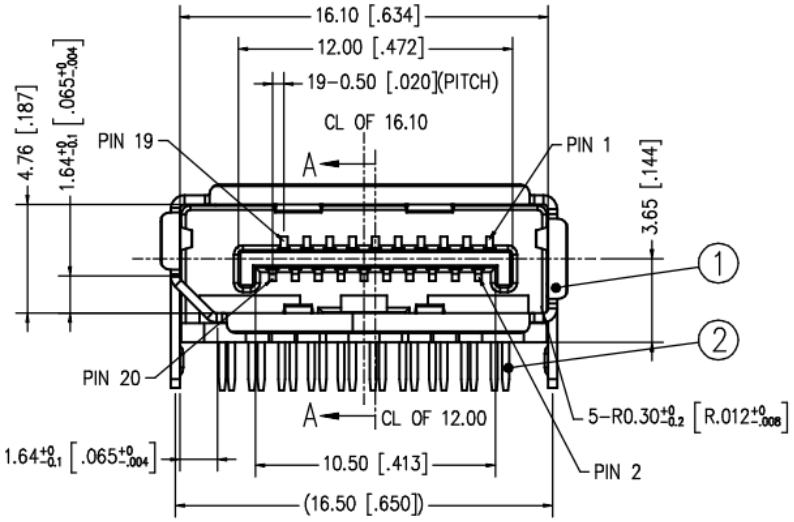

Pin	Signal	Function
1	DP LANE0+	Main Link Lane 0+ channel
2	GND	Ground
3	DP LANE0-	Main Link Lane 0- channel
4	DP LANE1+	Main Link Lane 1+ channel
5	GND	Ground
6	DP LANE1-	Main Link Lane 1- channel
7	DP LANE2+	Main Link Lane 2+ channel
8	GND	Ground
9	DP LANE2-	Main Link Lane 2- channel
10	DP LANE3+	Main Link Lane 3+ channel
11	GND	Ground
12	DP LANE3-	Main Link Lane 3- channel
13	Config1	
14	Config2	
15	AUX+	Auxiliary + channel
16	GND	Ground
17	AUX-	Auxiliary - channel
18	HOT PLUG	Hot plug detects for DP panel
19	RTN_PWR	the power
20	DP PWR	3.3V power for DP panel

Distribuída no Brasil pela LRI | vendas@lri.com.br | 51 2129-3000

4.7 cPCI-A3MXM Board to Board Connector (CN6)

Table 7: cPCI-A3MXM board to board connector

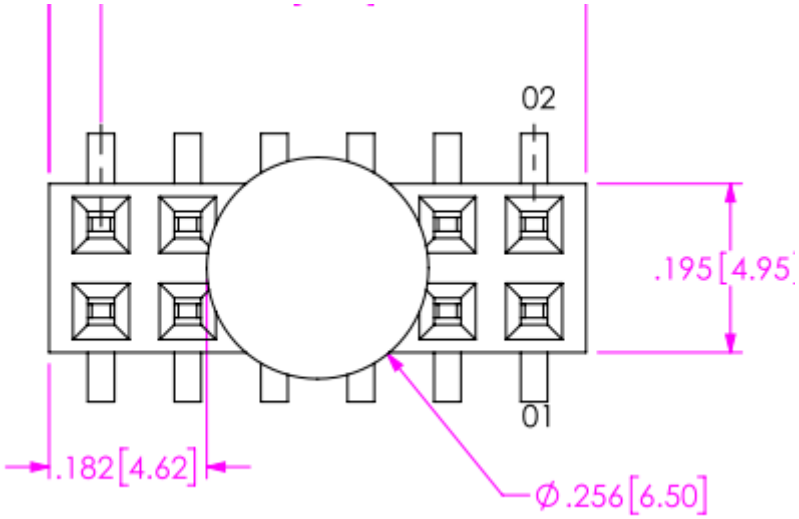

Pin	Signal	Function
1	P12V_PSU	Provides more power from another peripheral card (Power board).
2	P12V_PSU	
3	P12V_PSU	
4	P12V_PSU	
5	P12V_PSU	
6	P12V_PSU	
7	GND	Ground
8	GND	Ground
9	GND	Ground
10	GND	Ground
11	NC	Not Connect
12	GND	Ground

Distribuída no Brasil pela LRI | vendas@lri.com.br | 51 2129-3000

4.8 MXM Connector

Table 8: MXM connector

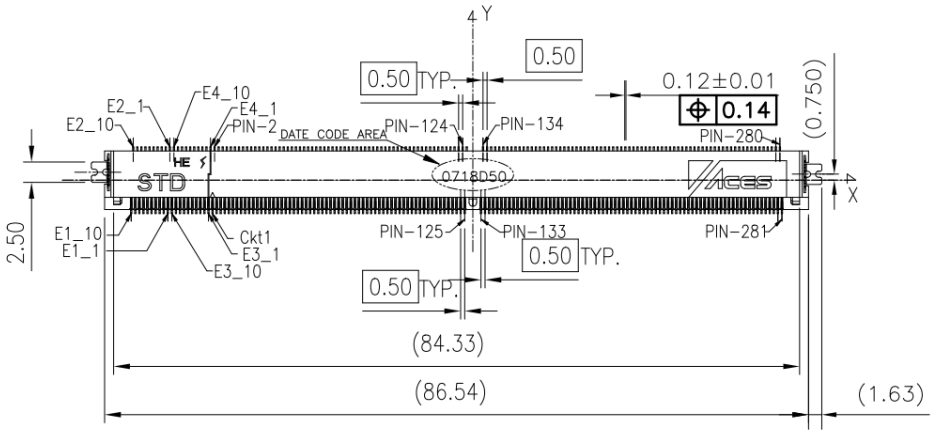

Pin	Signal	Pin	Signal
E1	P_+12V_MXM	E2	P_+12V_MXM
E3	GND	E4	GND
1	P_+5V_MXM	2	MXM_PRSNT_R_N
3	P_+5V_MXM	4	MXM_WAKE_N
5	P_+5V_MXM	6	MXM_PWRGD
7	P_+5V_MXM	8	MXM_CB_PWR_PG
9	P_+5V_MXM	10	
11	GND	12	GND
13	GND	14	
15	GND	16	
17	GND	18	MXM_PWR_LEVEL
19	MXM_PCIE_STD_SW_N	20	MXM_TH_OVERT_N
21	MXM_VGA_DISABLE_N	22	MXM_TH_ALERT_N
23		24	MXM_TH_PWM
25		26	
27		28	
29		30	
31		32	MXM_I2CS_SDA_3V3
33		34	MXM_I2CS_SCL_3V3
35		36	GND
37	GND	38	
39		40	
41		42	
43		44	
45		46	GND
47	GND	48	
49		50	
51		52	GND
53	GND	54	
55		56	

LRI Distribuída no Brasil pela LRI | vendas@lri.com.br | 51 2129-3000

57		58	GND
59	GND	60	
61		62	
63		64	GND
65	GND	66	
67		68	
69		70	GND
71	GND	72	
73		74	
75		76	GND
77	GND	78	
79		80	
81		82	GND
83	GND	84	
85		86	
87		88	GND
89	GND	90	
91		92	
93		94	GND
95	GND	96	GPU_PCIE_RX7_DN
97	GPU_PCIE_TX7_DN	98	GPU_PCIE_RX7_DP
99	GPU_PCIE_TX7_DP	100	GND
101	GND	102	GPU_PCIE_RX6_DN
103	GPU_PCIE_TX6_DN	104	GPU_PCIE_RX6_DP
105	GPU_PCIE_TX6_DP	106	GND
107	GND	108	GPU_PCIE_RX5_DN
109	GPU_PCIE_TX5_DN	110	GPU_PCIE_RX5_DP
111	GPU_PCIE_TX5_DP	112	GND
113	GND	114	GPU_PCIE_RX4_DN
115	GPU_PCIE_TX4_DN	116	GPU_PCIE_RX4_DP
117	GPU_PCIE_TX4_DP	118	GND
119	GND	120	GPU_PCIE_RX3_DN
121	GPU_PCIE_TX3_DN	122	GPU_PCIE_RX3_DP
123	GPU_PCIE_TX3_DP	124	GND
125	GND		
133	GND	134	GND
135	GPU_PCIE_TX2_DN	136	GPU_PCIE_RX2_DN
137	GPU_PCIE_TX2_DP	138	GPU_PCIE_RX2_DP
139	GND	140	GND
141	GPU_PCIE_TX1_DN	142	GPU_PCIE_RX1_DN
143	GPU_PCIE_TX1_DP	144	GPU_PCIE_RX1_DP
145	GND	146	GND
147	GPU_PCIE_TX0_DN	148	GPU_PCIE_RX0_DN
149	GPU_PCIE_TX0_DP	150	GPU_PCIE_RX0_DP
151	GND	152	GND
153	MXM_PCIE_CLK_C_DN	154	MXM_PCIE_CLK_REQ_N

Distribuída no Brasil pela LRI | vendas@lri.com.br | 51 2129-3000

155	MXM_PCIE_CLK_C_DP	156	PLTRST_MXM_N2
157	GND	158	
159		160	
161		162	
163		164	
165		166	GND
167		168	
169		170	
171		172	
173	GND	174	GND
175		176	
177		178	
179	GND	180	GND
181		182	
183		184	
185	GND	186	GND
187		188	
189		190	
191	GND	192	GND
193		194	
195		196	
197	GND	198	GND
199	MXM_DP_C_L0_DN	200	
201	MXM_DP_C_L0_DP	202	
203	GND	204	GND
205	MXM_DP_C_L1_DN	206	MXM_DP_D_L0_DN
207	MXM_DP_C_L1_DP	208	MXM_DP_D_L0_DP
209	GND	210	GND
211	MXM_DP_C_L2_DN	212	MXM_DP_D_L1_DN
213	MXM_DP_C_L2_DP	214	MXM_DP_D_L1_DP
215	GND	216	GND
217	MXM_DP_C_L3_DN	218	MXM_DP_D_L2_DN
219	MXM_DP_C_L3_DP	220	MXM_DP_D_L2_DP
221	GND	222	GND
223	MXM_DP_C_AUX_DN	224	MXM_DP_D_L3_DN
225	MXM_DP_C_AUX_DP	226	MXM_DP_D_L3_DP
227		228	GND
229		230	MXM_DP_D_AUX_DN
231		232	MXM_DP_D_AUX_DP
233		234	DP_C_HPD
235		236	DP_D_HPD
237		238	
239		240	P_+3V3_MXM
241		242	P_+3V3_MXM
243		244	GND
245		246	MXM_DP_B_L0_DN

Distribuída no Brasil pela LRI | vendas@lri.com.br | 51 2129-3000

247		248	MXM_DP_B_L0_DP
249		250	GND
251	GND	252	MXM_DP_B_L1_DN
253	MXM_DP_A_L0_DN	254	MXM_DP_B_L1_DP
255	MXM_DP_A_L0_DP	256	GND
257	GND	258	MXM_DP_B_L2_DN
259	MXM_DP_A_L1_DN	260	MXM_DP_B_L2_DP
261	MXM_DP_A_L1_DP	262	GND
263	GND	264	MXM_DP_B_L3_DN
265	MXM_DP_A_L2_DN	266	MXM_DP_B_L3_DP
267	MXM_DP_A_L2_DP	268	GND
269	GND	270	MXM_DP_B_AUX_DN
271	MXM_DP_A_L3_DN	272	MXM_DP_B_AUX_DP
273	MXM_DP_A_L3_DP	274	DP_B_HPD
275	GND	276	DP_A_HPD
277	MXM_DP_A_AUX_DN	278	P_+3V3_MXM
279	MXM_DP_A_AUX_DP	280	P_+3V3_MXM
281	MXM_PRSNT_N		

4.9 DB-A3PW Board to Board Connector (CN6) – SKU1

Table 9: DB-A3PW Board to Board Connector

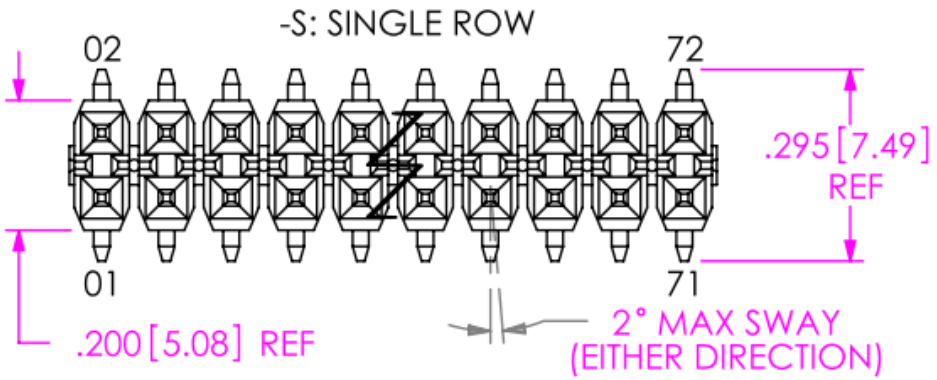

Pin	Signal	Function
1	P12V_PSU	12V power from P1 via CN6 to 1F front board
2	P12V_PSU	
3	P12V_PSU	
4	P12V_PSU	
5	P12V_PSU	
6	P12V_PSU	
7	GND	Ground
8	GND	Ground
9	GND	Ground
10	GND	Ground
11	GND	Ground

Distribuída no Brasil pela LRI | vendas@lri.com.br | 51 2129-3000

12	GND	Ground

4.10 DB-A3PW FAN Connector (FAN1) – SKU1

Table 10: DB-A3PW FAN connector

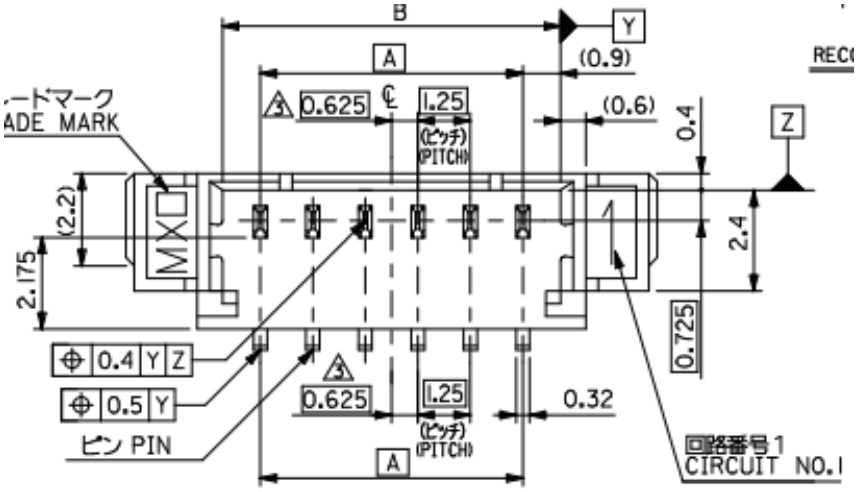

Pin	Signal
1	NC
2	NC
3	FAN_PWR
4	GND

4.11 DB-A3PW ATX 4 Pin Power Connector (CN_PWR) – SKU2

Table 11: DB-A3PW ATX 4 pin power connector

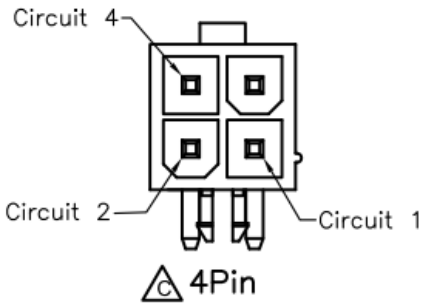

Pin	Signal Name	Function
1	GND	Ground
2	GND	Ground
3	P_+12V	12V Power Source
4	P_+12V	12V Power Source

Distribuída no Brasil pela LRI | vendas@lri.com.br | 51 2129-3000

4.12 DIP Switch Connector

The cPCI-A3MXM has two DIP switches (SW1-2) to set the switch connectors.

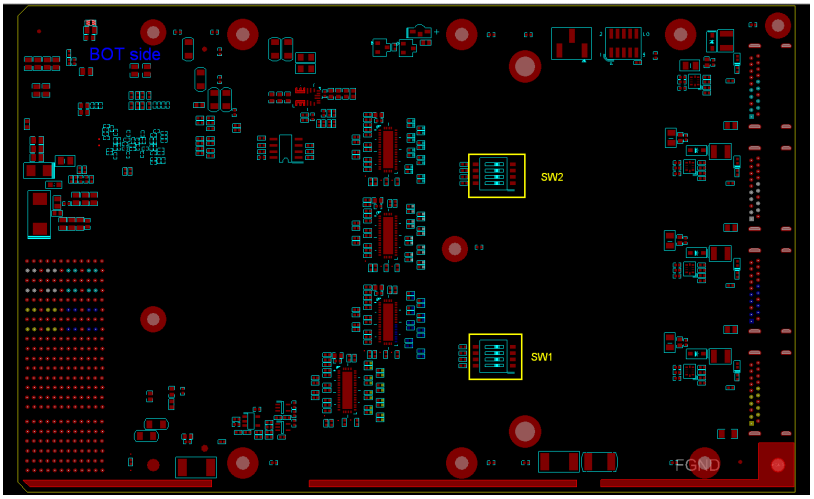

Figure 8:Switch locations (Bottom)

Table 12: Switch connector 1 and 2

SW1 Mode Switch Settings

SW1	Pin1	Pin2	Pin3	Pin4
Display Port 3 Output (CN5)			OFF	ON
Display Port 4 Output (CN3)	OFF	ON		

SW2 Mode Switch Settings

SW2	Pin1	Pin2	Pin3	Pin4
Display Port 1 Output (CN4)			OFF	ON
Display Port 2 Output (CN2)	OFF	ON		

Distribuída no Brasil pela LRI | vendas@lri.com.br | 51 2129-3000

This page intentionally left blank.

Distribuída no Brasil pela LRI | vendas@lri.com.br | 51 2129-3000

5 Driver Installation

5.1 Windows Driver

Please download the Windows drivers from the ADLINK website. The following describes the cPCI-A3MXM driver installation procedures for Windows 10. Install the Windows operating system before installing any driver. Most standard I/O device drivers are installed during Windows installation. Extract the following files and execute the program to install the corresponding driver.

A1000 Driver:

Download Software Resources | ADLINK (adlinktech.com)

A4500 Driver:

Download Software Resources | ADLINK (adlinktech.com)

Distribuída no Brasil pela LRI | vendas@lri.com.br | 51 2129-3000

Safety Instructions

Read and follow all instructions marked on the product and in the documentation before you operate your system. Retain all safety and operating instructions for future use.

- Please read these safety instructions carefully.
- Please keep this User‘s Manual for later reference.
- Read the specifications section of this manual for detailed information on the operating environment of this equipment.
- When installing/mounting or uninstalling/removing equipment, turn off the power and unplug any power cords/cables.
- To avoid electrical shock and/or damage to equipment:
  - Keep equipment away from water or liquid sources.
  - Keep equipment away from high heat or high humidity.
  - Keep equipment properly ventilated (do not block or cover ventilation openings).
  - Make sure to use recommended voltage and power source settings.
  - Always install and operate equipment near an easily accessible electrical socket-outlet.
  - Secure the power cord (do not place any object on/over the power cord).
  - Only install/attach and operate equipment on stable surfaces and/or recommended mountings.
  - If the equipment will not be used for long periods of time, turn off and unplug the equipment from its power source.
- Never attempt to fix the equipment. Equipment should only be serviced by qualified personne

LRI Distribuída no Brasil pela LRI | vendas@lri.com.br | 51 2129-3000

Getting Services

Ask an Expert: https://www.adlinktech.com/en/Askanexpert

ADLINK Technology, Inc.
Address: No. 66, Huaya 1st Road, Guishan District
Taoyuan City 333, Taiwan
Tel: +886-3-216-5088
Fax: +886-3-328-5723
Email: service@adlinktech.com

Ampro ADLINK Technology, Inc.
Address: 6450 Via Del Oro, San Jose, CA 95119-1208, USA
Tel: +1-408-360-0200
Toll Free: +1-800-966-5200 (USA only)
Fax: +1-408-600-1189
Email: info@adlinktech.com

ADLINK Technology (China) Co., Ltd.
Address: 300 Fang Chun Rd., Zhangjiang Hi-Tech Park, Pudong New Area
Shanghai, 201203 China
Tel: +86-21-5132-8988
Fax: +86-21-5132-3588
Email: market@adlinktech.com

ADLINK Technology GmbH
Address: Hans-Thoma-Strasse 8-10, D-68163, Mannheim, Germany
Tel: +49-621-43214-0
Fax: +49-621 43214-30
Email: emea@adlinktech.com

Please visit the Contact page at www.adlinktech.com for information on how to contact the ADLINK regional office nearest you.

LRI Distribuída no Brasil pela LRI | vendas@lri.com.br | 51 2129-3000